LiTOP



OFF-ROAD LED LIGHTING CATALOG

HIGH-PERFORMANCE 4X4 ILLUMINATION SOLUTIONS

BUILT FOR EXTREME
EXTREME CONDITIONS

BRIGHT AND RELIABLE
PERFORMANCE

PROFESSIONAL
OFF-ROAD SOLUTIONS

BUILT FOR
EXTREME CONDITIONS

BRIGHT AND
PERFORMANCE

OFF-ROAD
SOLUTIONS



COMPANY PROFILE

Professional & Excellence

Founded in 2000, Guangzhou LITOP Electrical & Lighting CO.,LTD. is a high?tech enterprise integrating research, development, manufacturing and sales of automotive intelligent lighting products. The headquarters and R&D base are located in the beautiful Zhongshan. Our company currently has more than 20,000 square meters of modern production plants, built with high?end dust?free production workshops and multiple automatic packaging and headlight automatic production lines. It was recognized by the local government as a “ high?tech enterprise ”, “ scientific and technological innovation small giant enterprise ” .

Our company's products cover automotive intelligent lighting, mobile lighting, commercial lighting and industrial lighting, and our product sales network covers more than 80 countries on five continents. In the international market, there are many high?quality OEM supporting suppliers in the field of automotive intelligent lighting; in the domestic automotive lighting field, it has been awarded as one of the top ten brand enterprises for many times, and is a strategic partner of high quality and honesty of all major light source manufacturers, and has won the industry and the majority of consumers' affirmation and praise.

Our company has a domestic advanced automotive intelligent lighting technology research and development team. Since its establishment, it has always adhered to the business principle of “ Talent?oriented, Innovation and Development ” .

Along with the continuous improvement of R&D investment, we have obtained more than 20 national technology patents and more than 50 national design patents. We have passed the IATF 16949:2016 International Automotive Industry Quality Management System and other certifications, ISO 14000 International Environmental system certification and CE, FCC, E? MARK and other international certifications.

LITOP BIG EVENT

2000 - 2026 Development History

2000 — LITOP is established in Guangzhou

2007 — Self-developed OEM ballast goes into production

2008 — Passed ISO 9001, CE & E-Mark certification; official certified supplier of China Manufacturing Network

2009 — Launched slim/standard ballasts & Canbus ballasts

2011 — Launched LED work lights & LED light bars

2012 — Entered automotive LED headlight industry, developed original D series ballast

2013 — Launched integrated ballast

2015 — Guangdong Science & Technology Innovation Little Giant Enterprise

2016 — Passed ISO/TS 16949:2009; recognized as High-tech Enterprise

2017 — Launched intelligent three-color LED headlight series

2018 — Developed Bi-LED projector lens & Canbus smart LED headlights; Chinese Top Ten Brand Enterprises

2019 — ISO 14000; second-gen LED dual lens; fully automatic production line built

2020 — Strategic partnership with STALLION MOTO for Central & South American markets

2021 — Launched D series LED headlights

2022 — Launched tri-color laser projector lens, fog lights & multi-function taillights

2023 — Launched EV power adapters & high-capacity portable power stations

2024 — Bluetooth intelligent color-changing LED car lights & tri-color laser-proof LED fog lenses

2025 — Next-generation matrix LED headlight system & expanded intelligent manufacturing

2026 — Integrated intelligent lighting ecosystem with smarter, greener products for global market

LITOP



Professional Lab Equipment

....

Contact Us for More Info



100% No Light Flickering



100% High-Temp Aging



Proven Stability in All Climates



Proven Stability in All Climates



Prevents Electric Leakage & Breakdown



Accurate Photometric Testing (Lumen/CCT/CRI)



100% Thermal Performance Tested



Accurate Photometric Testing (Lumen/CCT/CRI)

ALL IN CONTROL

INTELLIGENT & POWERFUL

Built to ensure the LED bulbs to get a long-term and stable illumination

EMC

Effectively prevent electromagnetic interference to electronic equipment such as car radios

DRIVER LONGER

Intelligence temperature controller to ensuresthe LED headlight bulbs over 30,000+ hrs of brilliant continuous light.

CANBUS UPGRADED

Delicated LED driver eliminates flicker and ensures full power with very turn-on.

TEMPERATURE CONTROL

Intelligent temperature control chip, effectively prevent temperature overload, more stable performance



ROTATIONAL ADAPTER

Make it easier to adjust a correct beam pattern and get an intensely focuse lighting effects

360°



WATERPROOF AND DUSTPROOF. EASILY HANDLES EXTREME

IP67 LEVEL WATERPROOF AND DUSTPROOF FEARLESS OF HARSH WEATHER



IP68 WATERPROOF

No Fear of Bad Weather





Operating Temperature

-40°C +176°C









Rated ★★★★★ by Global Automotive Enthusiasts

Superior Lighting Performance, Exceptional Service, Real User Experience

2025-07-02 10:03

Dear Alex, may I know how is these headlights working for you?

they are super perfect

they are super perfect

son super perfectos

2025-06-14 19:53

That's great Henry, thank you

2025-06-25 08:28

Hello henry! my order has arrived and I wanted to tell you that we arevery satisfied with the product, it was what we expected. Thank youvery much for your attention and we will continue working, have anice day!

2025-06-28 16:55

i like it

2025-06-28 16:55

your product is good

2025-06-28 16:55

all is bright

2025-06-28 16:56

and good quality

2025-07-26 20:07

Okay

2025-07-21 11:25

saludos hermano.me tiene muy bien informado de cualquier novedad gracias

2025-08-05 22:04

I will promptly provide you with the tracking number after shipment

2025-08-05 22:05

Received

2025-08-05 22:05

thank you for the great and fast response

am fine planning to get a big consignment of headlights

2025-06-18 13:56

That's great

2025-06-18 13:59

Hello my friend, We appreciate you can give us a nice review if you like our product.

2025-06-18 14:02

Your products are awesome easy to install, quality product s andabove all the best

2025-06-28 15:32

good product good quality

good product good quality

2025-07-31 16:58

Alibaba.com Live



All-round display production

2025-07-31 16:58

i am a regular client, their products are the best!!

Hello.
Thank you for your concern.Your products are of good quality. so sales aregoing smoothly.will place another order. so I look forward toworking with you again.

2025-08-07 22:13



2025-08-07 22:13

good light



LITOP

/// GUIDE YOUR PATH ///

POWER BY LITOP LIGHTING



10 GEN

CSP 7545

160 W

16000LM

12V

COOLER GTX

Facil instalación

Haz de luz con gran profundidad

Iluminación instantánea

Chip CSP de alta iluminación

Enfriamiento inteligente

Ventilador de grado automotriz

MODELO: DOB GTX 24V
LED: CHIP LED DOB
LUZ: LUZ BLANCA 6000-6500K
LUMENS: 16.000 LM

VIDA ÚTIL: 50.000HSC
ONSUMO: 160W
VOLTAJE: 12V

CONECTORES

H1-H4 -H7- H11-H13-9005-9006-9012

LITOP

/// GUIDE YOUR PATH ///

POWER BY LITOP LIGHTING



Facil instalación

Haz de luz con gran profundidad

Iluminación instantánea

Chip CSP de alta iluminación

Enfriamiento inteligente

Ventilador de grado automotriz

10 GEN

CSP 3570

30 W

3000LM

12V

COOLER GTX

MODELO: DOB GTX 24V
LED: CHIP LED DOB
LUZ: LUZ BLANCA 6000
LUMENS: 3000LM

VIDA ÚTIL: 50.000HSC
ONSUMO: 30W
VOLTAJE: 12V

CONECTORES

H7- H11 - 9005-9006- 9012 - 5202

LITOP

GUIDE YOUR PATH

POWER BY LITOP LIGHTING



10 GEN

CSP 3570

60 W

35000LM

12V-24V

COOLER GTX

Facil instalación

Haz de luz con gran profundidad

Iluminación instantánea

Chip CSP de alta iluminación

Enfriamiento inteligente

Ventilador de grado automotriz

KIT DE LED DOB GTX 24V

USO ESPECIAL PARA 24V, APLICABLE A 12V

MODELO: DOB GTX 24V
LED: CHIP LED DOB
LUZ: LUZ BLANCA/AMBAR 6500K
LUMENS: 35.000 LM

VIDA ÚTIL: 40.000 HS
CONSUMO: 60W
VOLTAJE: 12V - 36V

CONECTORES

H4 - H7 - H1 - H11 -H13 9004 -9007
9005 -9006 - H3 - 880-9012

LITOP

GUIDE YOUR PATH

POWER BY LITOP LIGHTING



10 GEN

CSP SMD 1860

50 W

10.000 LM

12V

COOLER GTX

KIT DE LED IR100 CANBUS

MODELO: IR100
LED: CHIP LED CSP CANBUS
LUZ: LUZ BLANCA
3.000K-6.00K
LUMENS: 10.000 LM

VIDA ÚTIL: 40.000 HS
CONSUMO: 50W
VOLTAJE: 12V

CONECTORES

H1 - H3 - H4 - H7 - H11 - H13-H16- 9004 - 9005 - 9006 - 9007-9012- 880

LITOP

GUIDE YOUR PATH

POWER BY LITOP LIGHTING



10 GEN

CHIP CSP

130W - 260W

15.600 LM
31.200 LM

12V

COOLER GTX

KIT DE LED IR100 CANBUS

MODELO: IR100
LED: CHIP LED CSP CANBUS **LUZ:** LUZ BLANCA 6.000K-6.500K
LUMENS: 5.600 LM-31.200 LM

VIDA ÚTIL: 40.000 HS **CO NSUMO:** 130W - 260W
VOLTAJE: 12V

CONECTORES

H1 - H3 - H4 - H7 - H11 - H13
9004 - 9005 - 9006 - 9007-9012

LITOP

/// GUIDE YOUR PATH ///

POWER BY LITOP LIGHTING



10 GEN

CHIP CSP

36 W

5.000 LM

24V

COOLER GTX

KIT DE LED IR100 CANBUS

MODELO: IR100
LED: CHIP LED CSP CANBUS
LUZ: LUZ BLANCA 6.000K
LUMENS: 5.000 LM

VIDA ÚTIL: 40.000 HS
CONSUMO: 50W
VOLTAJE: 24V

CONECTORES
H2-9006

LITOP

/// GUIDE YOUR PATH ///

POWER BY LITOP LIGHTING



10 GEN

CSP 3570

75 W

8.000 LM

12V

COOLER GTX

KIT DE LED IR100 CANBUS

MODELO: IR100
LED: CHIP LED CSP CANBUS
LUZ: LUZ BLANCA 6.000K
LUMENS: 8.000 LM

VIDA ÚTIL: 40.000 HS
CONSUMO: 75W
VOLTAJE: 12V

CONECTORES
K10

LITOP

GUIDE YOUR PATH

POWER BY LITOP LIGHTING



10 GEN

CHIP CSP

200 W

4.000 LM

12V

COOLER GTX

KIT DE LED IR100 CANBUS

MODELO: IR100
LED: CHIP LED CSP CANBUS
LUZ: LUZ BLANCA 6.000K
LUMENS: 4.000 LM

VIDA ÚTIL: 40.000 HS
CONSUMO: 200 W
VOLTAJE: 12V

CONECTORES

H3 - H4 - H7 - H11 - H13
9003-9004 - 9005 - 9006 -
9007-880-881-H27

LITOP

/// GUIDE YOUR PATH ///

POWER BY LITOP LIGHTING



10 GEN

CSP 4575/3570

200W

48.000 LM

12V

COOLER GTX

KIT DE LED IR100 CANBUS

MODELO: IR100
LED: CHIP LED CSP CANBUS
LUZ: LUZ BLANCA 6.000K
LUMENS: 48.000LM

VIDA ÚTIL: 40.000 HS
CONSUMO: 200W
VOLTAJE: 12V

CONECTORES

H1 - H3 - H4 - H7 - H11 - H13
9004 - 9005 - 9006 - 9012-880-H16

LITOP

/// GUIDE YOUR PATH ///

POWER BY LITOP LIGHTING



10 GEN

CHIP COB

54 W

8.000 LM

12V

COOLER GTX

KIT DE LED IR100 CANBUS

MODELO: IR100
LED: CHIP LED CSP CANBUS
LUZ: LUZ BLANCA 6.000K
LUMENS: 8.000 LM

VIDA ÚTIL: 40.000 HS
CONSUMO: 54 W
VOLTAJE: 12V

CONECTORES

H1 - H3 - H4 - H7 - H11 - H13
9005 - 9006 -9007-9012

LITOP

/// GUIDE YOUR PATH ///

POWER BY LITOP LIGHTING



10 GEN

CHIP CSP

55 W

60.000 LM

12V

COOLER GTX

KIT DE LED DAKAR NEW SERIES CANBUS

MODELO: DOB GTX 12V
LED: CHIP CSP SUPER CANBUS
LUZ: LUZ BLANCA 6500K
LUMENS: 60.000 LM

VIDA ÚTIL: 40.000 HS
CONSUMO: 55W
VOLTAJE: 12V

CONECTORES

9004 - 9005 - 9006 - 9007 - 9012 - H1
H11 - H27 - H3 - H4 - H7 - P13W - PSX24

LITOP

/// GUIDE YOUR PATH ///

POWER BY LITOP LIGHTING

OFF ROAD KIT DE LED

D SERIES REEMPLAZO ORIGINAL

KB4-D1S

D1R - D1S 12V 35 W
ATTS 6000K
PLUG AND PLAY



KB4-D2S/R

D2R - D2S 12V 35W
ATTS 6000K
PLUG AND PLAY



KB4-D3R/S

D3R - D3S 12V 35W
ATTS 6000K
PLUG AND PLAY



KB4-D4S/R

D4R - D4S 12V 35W
ATTS 6000K
PLUG AND PLAY



KB4-D5S

D5S 12V 35W
ATTS 6000K
PLUG AND PLAY



KB4-D8S

D8S 12V 35 W
ATTS 6000K PLUG AND PLAY



WATERPROOF FOG LAMP

Quality optimization Full of details

Super large fin shaped bottom heat dissipation Greatly improved themmal conductivity The lamp body dissipates heat faster.

Customized chip lluminate farther and wider, emit light No dark areas, long lifespan.



Aluminium alloy lamp body

High definition high-quality lens Central focus, strong penetration Uniform color.

LED DUAL LIGHT DESIGN

At night, with a wide view and foresight, driving is safer Only with good headlights can Enjoy the journey. Note: This lens only has a flat tangent line.



INSTALLATION POSITION:ORIGINAL FOG LAMP POSITION

Will not damage the original headlamp assembly
Will not damage the original line
No professional decoding
No professional lamp changing technology
Construction difficulty: moderate







WHAT CAR CAN BE INSTALLED?



WHAT LIGHT SHOULD I TURN ON IN RAINY DAYS?





Double flashing cannot be turned on in rainy days, and the rear fog lamp cannot be turned on everyday!

INSTALLATION PRECAUTIONS



For oval fog lamps, the minimum diameter of the fog lamp hole should be measured. If the minimum diameter is less than 8 cm, the hole can be expanded to 8 cm in diameter to install 3-inch products.



Circular fog lamp measurement Fog lamp hole diameter, 7 cm, 2.5 inches, 8 cm, 3 inches



2"N60SI /2.5"N70SI

WATERPROOF FOG LAMP



Work temp:	-40~105°C
Power:	35W(LB) 45W(HB)
Life-Span:	>30000hrs
Input Voltage:	9-16V
Color Temp:	6000K



N60DI WATERPROOF FOG LAMP



Work temp:	-40~105°C
Power:	35W(LB) 50W(HB)
Life-Span:	>30000hrs
Input Voltage:	9-16V
Color Temp:	6000K



N60DI-STR WATERPROOF FOG LAMP



Work temp:	-40~105°C
Power:	35W(LB) 50W(HB)
Life-Span:	>30000hrs
Input Voltage:	9-16V
Color Temp:	6000K



N90SI WATERPROOF FOG LAMP



Work temp:	-40~105°C
Power:	40W(LB) 50W(HB)
Life-Span:	>30000hrs
Input Voltage:	9-16V
Color Temp:	6000K

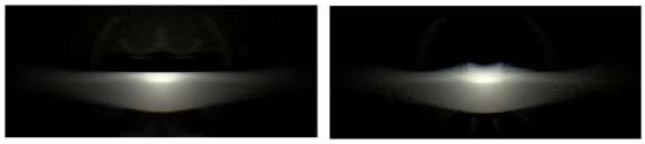

N90DI-STR WATERPROOF FOG LAMP



Work temp:	-40~105°C
Power:	45W(LB) 76W(HB)
Life-Span:	>30000hrs
Input Voltage:	9-16V
Color Temp:	6000K



N90D3-STR WATERPROOF FOG LAMP



Work temp:	-40~105°C
Power:	45W(LB) 76W(HB)
Life-Span:	>30000hrs
Input Voltage:	9-16V
Color Temp:	6000K



N60S2 WATERPROOF FOG LAMP



Work temp:	-40~105°C
Power:	35W(LB) 45W(HB)
Life-Span:	>30000hrs
Input Voltage:	9-16V
Color Temp:	6000K



N60D2-STR WATERPROOF FOG LAMP



Work temp:	-40~105°C
Power:	40W(LB) 50W(HB)
Life-Span:	>30000hrs
Input Voltage:	9-16V
Color Temp:	6000K



N60D2 WATERPROOF FOG LAMP



Work temp:	-40~105°C
Power:	35W(LB) 50W(HB)
Life-Span:	>30000hrs
Input Voltage:	9-16V
Color Temp:	6000K



N90S2 WATERPROOF FOG LAMP



Work temp:	-40~105°C
Power:	40W(LB) 50W(HB)
Life-Span:	>30000hrs
Input Voltage:	9-16V
Color Temp:	6000K

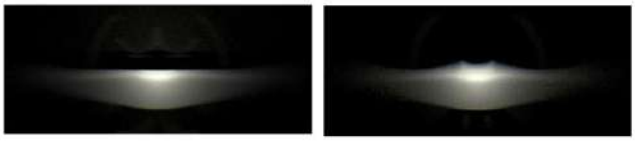

N90D2-STR WATERPROOF FOG LAMP



Work temp:	-40~105°C
Power:	45W(LB) 76W(HB)
Life-Span:	>30000hrs
Input Voltage:	9-16V
Color Temp:	6000K



N90D2-STR WATERPROOF FOG LAMP



Work temp:	-40~105°C
Power:	45W(LB) 76W(HB)
Life-Span:	>30000hrs
Input Voltage:	9-16V
Color Temp:	6000K



2 INCH 3 DRAGON
WATERPROOF FOG LAMP

Lumens	3400lm(LB) 4000lm(HB)
Operating Voltage	9-16V
Power	40W(LB) 60W(HB)
Color Temeprature	6000K
IP Grade	IP 67

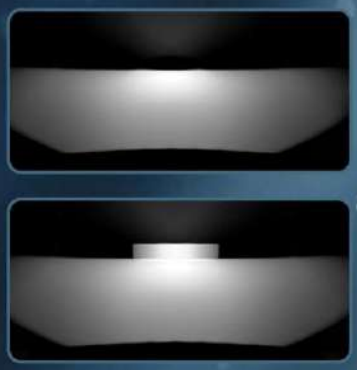

2 INCH C60
WATERPROOF FOG LAMP



Work temp	-40~105℃
Operating Voltage	9-16V
Power	35W(LB) 45W(HB)
Color Temeprature	6000K
IP Grade	IP 67

RECTANGULAR THREE-LENS



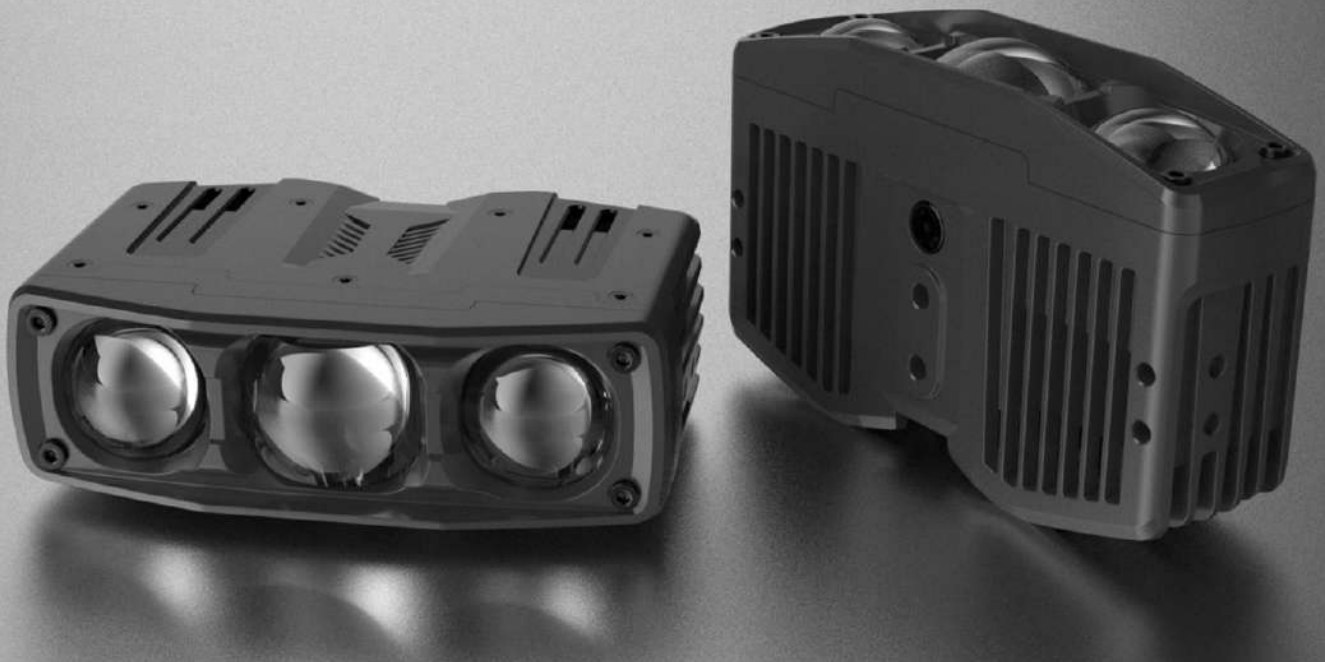

Power:	75W(LB),95W(HB)
LUX:	1100lx±15%@10m(LB),1300lx±15%@10m(HB)
Lumens:	4300lm±15% (LB),5600lm±15%(HB)
Color temp:	5000K-6500K
LED chip:	3570 three-core and 4575 six-core

1” MATRIX LED PROJECT LENS



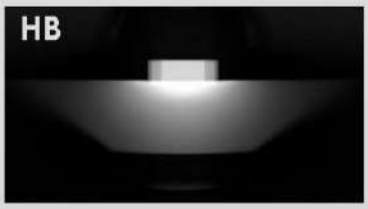



Power:	25W(LB),50W(HB)
LUX:	320lx±15%@10m(LB),470lx±15%@10m(HB)
Lumens:	1600lm±15%（LB）,2100lm±15%（HB）
Color temp:	5500K-6500K
LED chip:	3570 three-core

I″ MATRIX LED
PROJECT LENS

High Beam

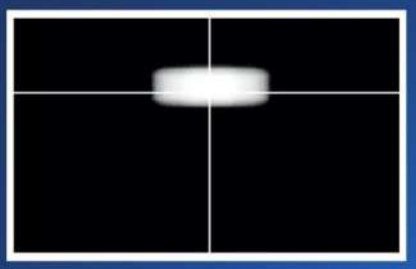

Low Beam 1

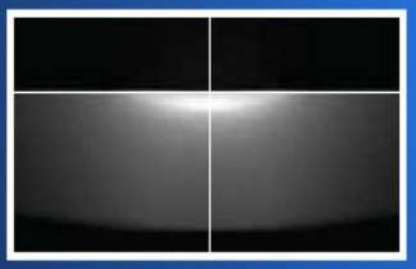

Low Beam 2

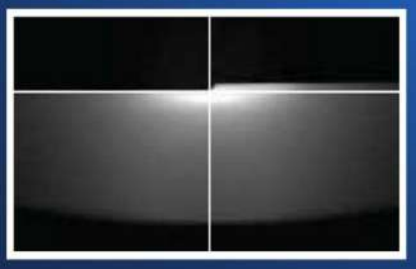

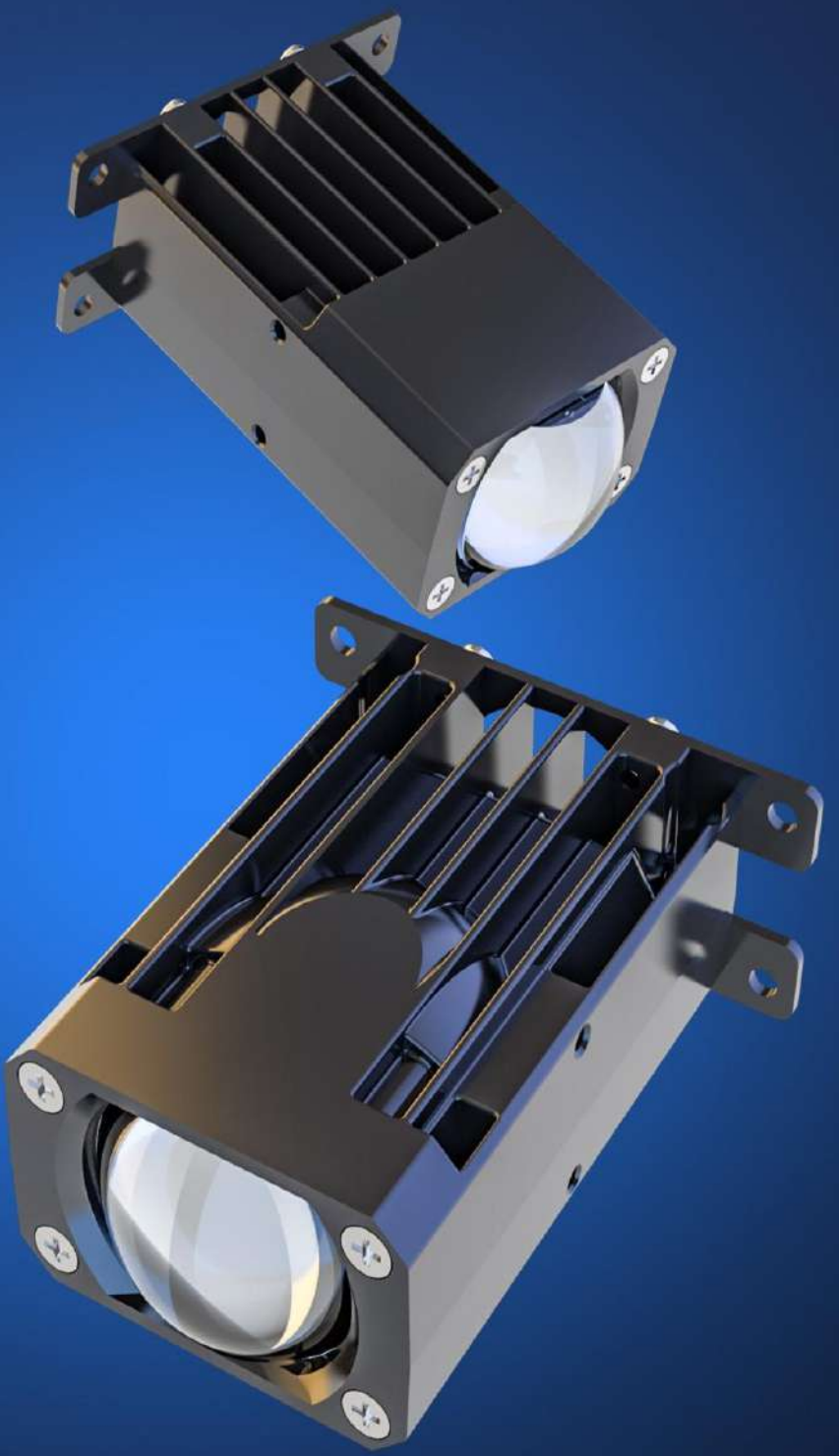

Low beam power:	20W	high beam power:	20W
LOW BEAM flux:	1000Lm	HIGH BEAM flux:	500lm
LOW BEAM illumination:	300lx	HIGH BEAM illumination:	500lx
COLOR Temperature:	5500~6500K		

N40S-HI/LI LED MATRIX LENS



Work temp:	-40~105°C
Power:	30W(LB) 20W(HB)
Life-Span:	>30000hrs
Input Voltage:	9-16V
Color Temp:	6000K



N40DI LED MATRIX LENS

QUICK INSTALL



WATERPROOF

N40D2 LED MATRIX LENS



Work temp:	-40~105°C
Power:	30W(LB) 40W(HB)
Life-Span:	>30000hrs
Input Voltage:	9-60V
Color Temp:	6000K

N40D4-STR LED MATRIX LENS



Work temp:	-40~105°C
Power:	25W(LB) 50W(HB)
Life-Span:	>30000hrs
Input Voltage:	9-16V
Color Temp:	6000K



N76D4 3"BI-LED PROJECTOR

TWO SILENT FANS EFFICIENT HEAT DISSIPATION

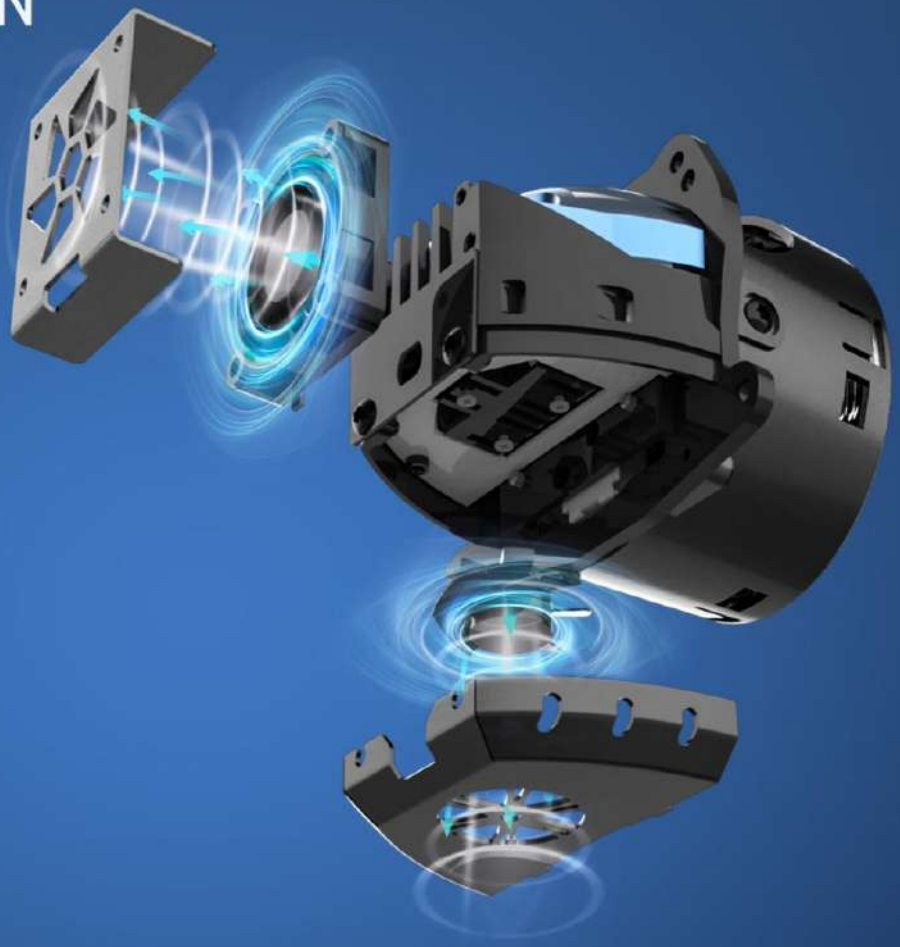

- ☑ Rapid heat conduction
- ☑ Continuous operation
- ☑ Stable and safe







DUAL FANS H-SERIES

Power: 62W(low beam) 73W(high beam)
Luminous: 1600lm(low beam) 2000lm(high beam)
Color temperature: 6000K
Life-Span: >30000hrs
Input Voltage: DC9-16V

X6 BI-LED PROJECTOR LENS



High Beam:	CSP Chip
Low beam:	CSP Chip
Power:	45W(HB)/36W(LB)
Life-Span:	>30000hrs
Input Voltage:	DC 9-16V
Color Temp:	6000K

X6 PRO BI-LED PROJECTOR LENS



High Beam:	CSP Chip
Low beam:	CSP Chip
Power:	55W(HB)/45W(LB)
Life-Span:	>30000hrs
Input Voltage:	DC 9-16V
Color Temp:	6000K

PROFESSIONAL EDITION THIRD GENERATION BI-LED PROJECTOR LENS



High Beam:	CSP Chip
Low beam:	CSP Chip
Power:	43W(HB)/35W(LB)
Life-Span:	>30000hrs
Input Voltage:	DC 9-16V
Color Temp:	6000K

H7MINI BI-LED PROJECTOR LENS



High Beam:	CSP Chip
Low beam:	CSP Chip
Power:	47W(HB)/56W(LB)
Life-Span:	>30000hrs
Input Voltage:	DC 9-20V
Color Temp:	6000K

X8 MAX BI-LED PROJECTOR LENS



High Beam:	OSRAM Chip
Low beam:	CSP Chip
Power:	67W(HB)/57W(LB)
Life-Span:	>30000hrs
Input Voltage:	DC 9-16V
Color Temp:	6000K

X9 BI-LED PROJECTOR LENS



High Beam:	CSP Chip
Low beam:	CSP Chip
Power:	67W(HB)/55W(LB)
Life-Span:	>30000hrs
Input Voltage:	DC 9-16V
Color Temp:	6000K

XII LASER LENS





Power:	75W(HB)/65W(LB)
Luminous Flux:	3000lm@10m
Luminous Flux:	5000lm@10m
Life-Span:	>30000hrs
Input Voltage:	DC 9-16V
Color temperature:	6000K

XIO LASER LENS



High Beam:	OSRAM Chip
Low beam:	CSP Chip
Power:	61W(HB)/48W(LB)
Life-Span:	>30000hrs
Input Voltage:	DC 9-16V
Color Temp:	6000K

H7 MINI PRO-2
LED PROJECTOR LEN



Work temp	-40~105℃
Operating Voltage	9-20V
Power	47W(LB) 56W(HB)
Color Temeprature	6000K
Lumen	2700lm(LB) 3700lm(HB)

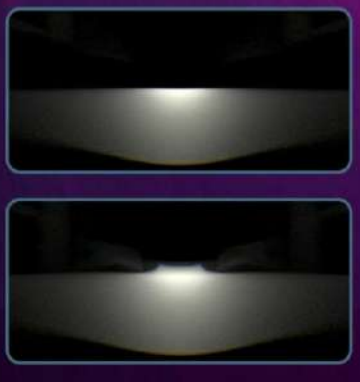

LED HEADLIGHT KIT

Model	H7/9005/H4
Power	35W
Lumen	1230lm
Working temperature	-40-105℃
Color temperature	6000K
Input Voltage	10-16V
Life-span	>30000 hrs

